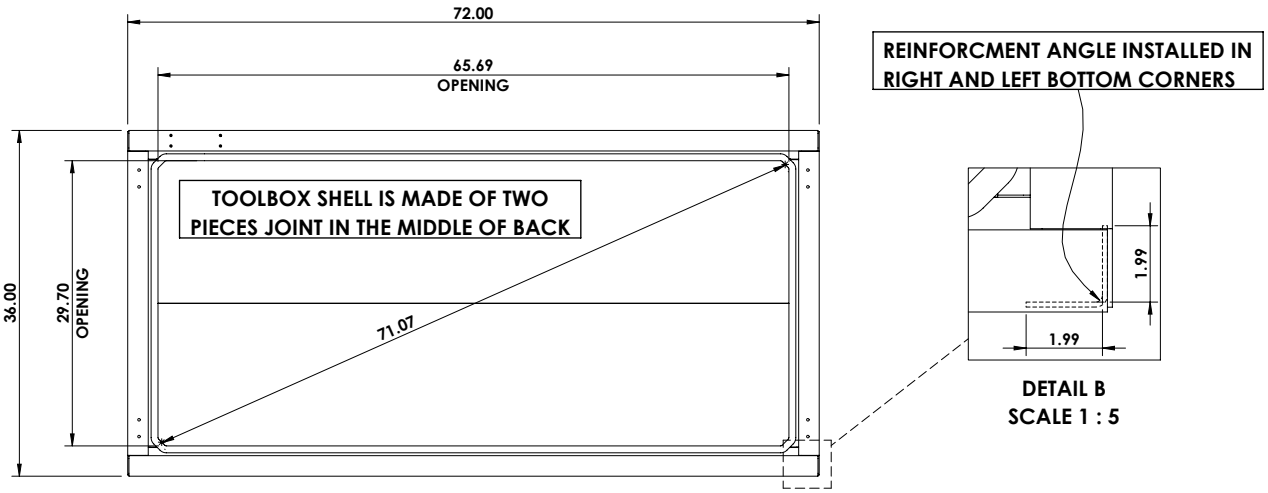

AVAILABLE CONFIGURATIONS

OPEN LEFT	OPEN RIGHT(SHOWN)
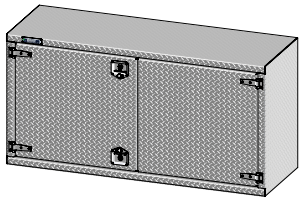	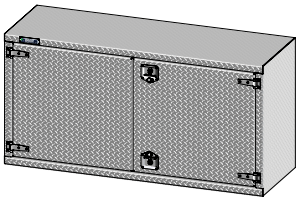

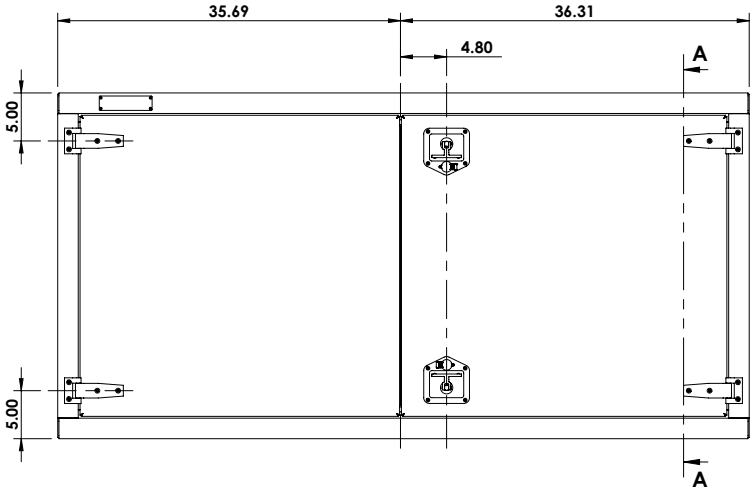

SECTION A-A

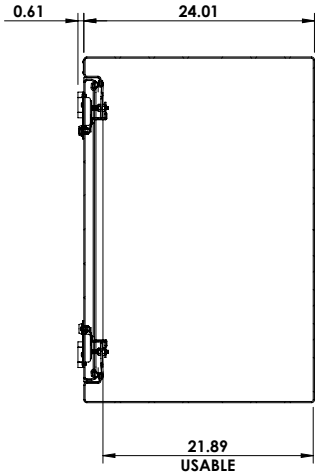

REVISIONS		
REV.	DESCRIPTION	DATE
1	INITIAL RELEASE	01/12/2017

Dimensions are in inches unless otherwise specified

PARTNO: **TR3672**

DESCR. **24D" x 36H" x 72W" Under body tool box w/2 doors Right hand , Locking t-handle**

MATERIAL: **0.125 Alum. Checkerplate 3003-H14**

APROX. WEIGHT: **150.81 LB** USABLE VOL.: **32.81 CU. FT.**

TOLERANCES: **.xx ± 0.13" .xxx ± 0.010"**

REV: **1**

DATE: **1/12/2017**

TREBOR MANUFACTURING

SHEET SCALE: **1:20** SHEET SIZE: **8.5" x 11"** PAGE: **1 OF 1**

This Document is the sole property of *Trebor Manufacturing*